ELSKY SPC10U Mini PC Specifications

PC size diagram ↓



Rear interface: VGA + dual network diagram ↓



Rear interface: dual HDMI + dual network diagram ↓



Rear interface: VGA + three network diagram ↓



Rear interface: dual HDMI + triple network diagram ↓



Rear interface: VGA + quad network diagram ↓

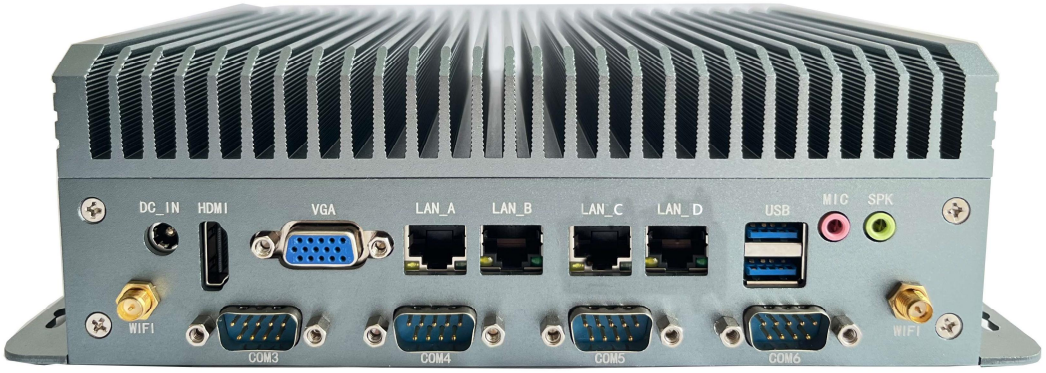

Rear interface: dual HDMI + quad network diagram ↓



Front interface diagram ↓



Bottom diagram

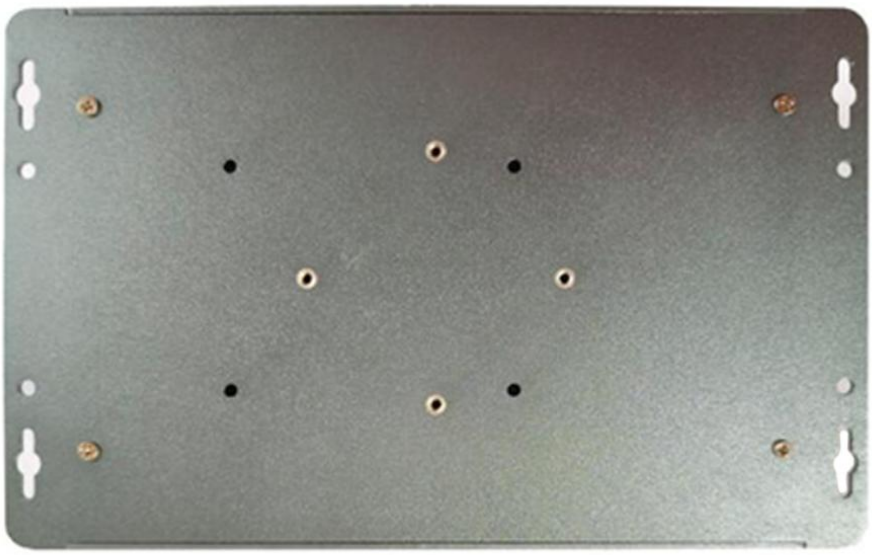

The pictures are for reference only, please refer to the actual product!

Dimensional Drawing

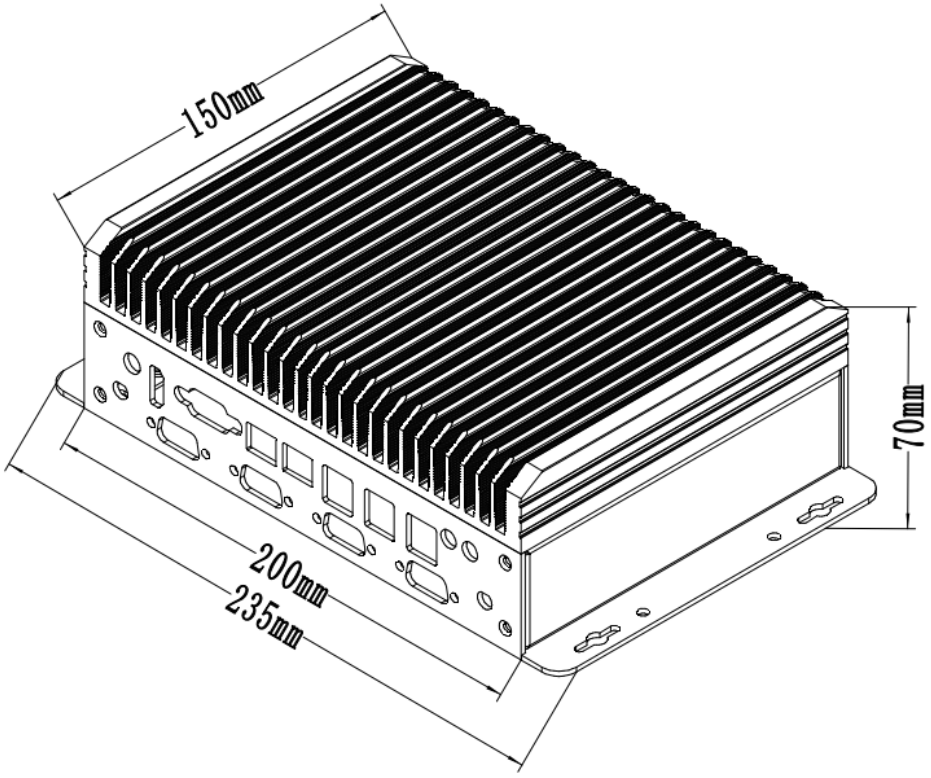

Bottom size drawing

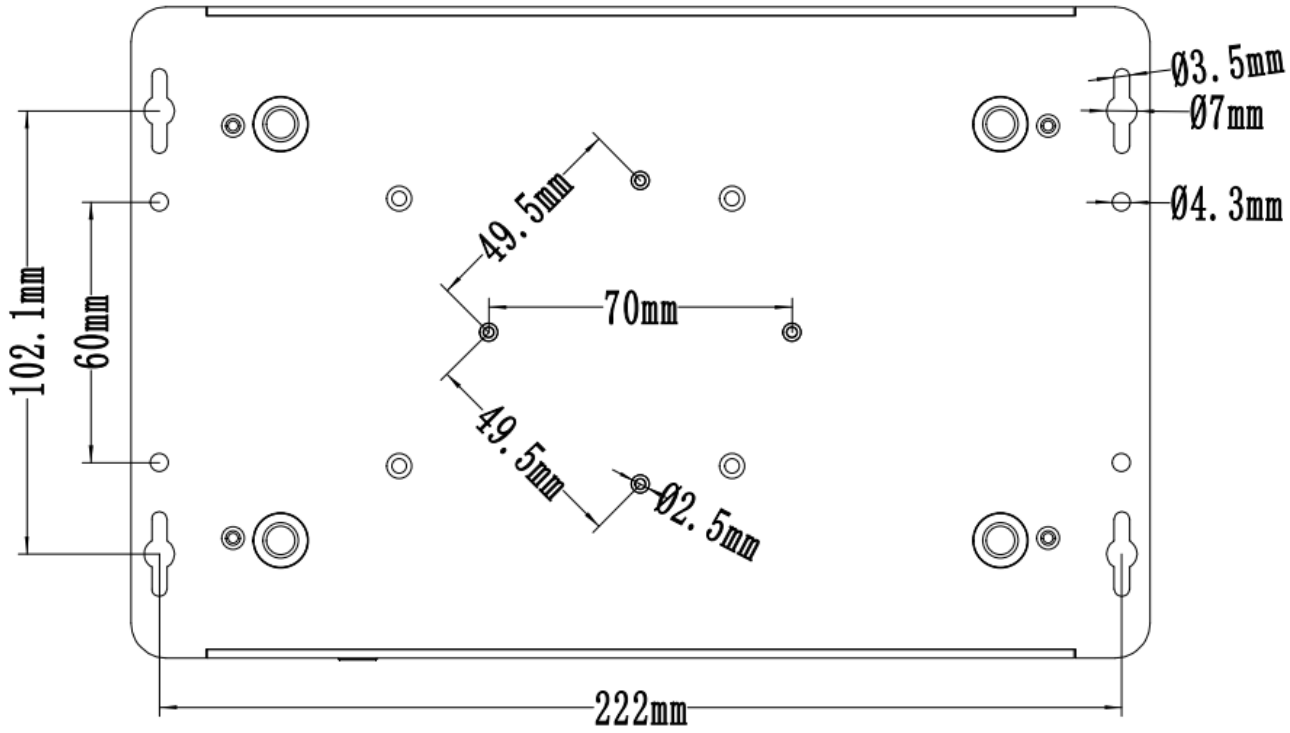

※※※

BIOS	Support power on, scheduled power on, remote power on and off, etc.
Watch Dog	Watchdog programming, support hardware reset function (256 levels, 0~255 seconds)
operating system	Supports Windows 11, Windows 10, Linux, etc.

※※※

BIOS function keys

BIOS function keys	Functional Description
Press Delete when the computer is turned on.	Enter the BIOS function interface
Press F11 when booting	Select the startup item, or choose to enter the BIOS function interface
← →	Move the left and right arrows to select an item
↑ ↓	Move the up and down arrows to select an item
Enter	Select the item and enter the submenu
+/-	Change selections, or add or subtract values
F1	Display related help content
F9	Restore factory settings
F10	Save changes and exit
Esc	quit

※※※

Rear panel interface	Power interface	1*DC power interface (5.5*2.5mm), supports DC 12V/19V, recommended power supply is 12V7A or 19V5A and above
	Display Interface	1*VGA port (1920*1080@60Hz) 1*HDMI1 2.0 interface (4096/3840*2160@60Hz) Optional 1*HDMI2 2.0 interface (4096/3840*2160@60Hz)
	LAN	Optional 2/3/4*LAN, support Intel i226-V 2.5G network card chip, support network wake-up function;
	USB	The dual-network PC supports 2*USB3.2 interfaces and 4*USB2.0 interfaces; The triple-network PC supports 2*USB3.2 interfaces and 2*USB2.0 interfaces; The quad-network PC supports 2*USB3.2 interfaces;
	COM	4*COM ports, support RS232 by default
	Audio	1*LINE_OUT interface, audio output 1*MIC_IN interface, microphone input
	WiFi	2*WiFi antenna interface
storage	M.2_SSD	1*M.2 Key-M slot, supports M.2 2280 hard drive by default, and M.2 2242 hard drive is optional; The default NVME (PCIE) protocol can be changed to support the SATA protocol;
	SATA	1*SATA3.0 hard disk interface, supports 2.5-inch SSD/HDD hard disk
Extensions	M2_WIFI	1*M2_WIFI interface, supports Key-E interface M.2 2230 WiFi module, can be changed to support WiFi/Bluetooth module
	CN1	1*CN1 interface, supports Key-B interface M.2 5G (3052/3042) module, can be modified to support M.2 4G (3042) module
Operating Environment	Operating temperature	-10℃ ~ 60℃
	Storage temperature	-20℃ ~ 70℃
	relative humidity	5%-95% relative humidity, non-condensing
	Work vibration	0.5grms/5-500HZ/random/operating
BIOS	Support power on, scheduled power on, remote power on and off, etc.	
Watch Dog	Watchdog programming, support hardware reset function (256 levels, 0~255 seconds)	
operating system	Supports Windows 11, Windows 10, Linux, etc.	

※※※

11th generation i5	Core	1145G7E	Quad-core 1.5G	4.1G	15	60
	Core	1145GRE	Quad-core 1.5G	4.1G	15	60
	Core	1145G7	Quad-core 2.6G	4.4G	28	60
	Core	1135G7	Quad-core 2.4G	4.2G	28	60
	Core	1155G7	Quad-core 2.5G	4.5G	28	60
11th generation I7	Core	1185GRE	Quad-core 1.8G	4.4G	15	60
	Core	1185G7E	Quad-core 1.8G	4.4G	15	60
	Core	1185G7	Quad-core 3.0G	4.8G	28	60
	Core	1165G7	Quad-core 2.8G	4.7G	28	60
	Core	1195G7	Quad-core 2.9G	5.0G	28	60

BIOS function keys

BIOS function keys	Functional Description
Press Delete when the computer is turned on.	Enter the BIOS function interface
Press F11 when booting	Select the startup item, or choose to enter the BIOS function interface
← →	Move the left and right arrows to select an item
↑ ↓	Move the up and down arrows to select an item
Enter	Select the item and enter the submenu
+/-	Change selections, or add or subtract values
F1	Display related help content
F9	Restore factory settings
F10	Save changes and exit
Esc	quit

※※※

storage	M.2_SSD	1*M.2 Key-M slot, supports M.2 2280 hard drive by default, and M.2 2242 hard drive is optional; Supports automatic switching between SATA protocol and NVME (PCIE) protocol by default;
	SATA	1*SATA3.0 hard disk interface, supports 2.5-inch SSD/HDD hard disk
Extensions	M2_WIFI	1*M2_WIFI interface, supports Key-E interface M.2 2230 WiFi module, can be changed to support WiFi/Bluetooth module
	CN1	1*CN1 interface, supports Key-B interface M.2 5G (3052/3042) module, can be modified to support M.2 4G (3042) module
Operating Environment	Operating temperature	-10℃ ~ 60℃
	Storage temperature	-20℃ ~ 70℃
	relative humidity	5%-95% relative humidity, non-condensing
	Work vibration	0.5grms/5-500HZ/random/operating
BIOS	Support power on, scheduled power on, remote power on and off, etc.	
Watch Dog	Watchdog programming, support hardware reset function (256 levels, 0~255 seconds)	
operating system	Supports Windows 11, Windows 10, Linux, etc.	

※※※

13th generation I7	Core	1355U	Ten cores and twelve threads	1.7G	5.0G	15	55
		1365U	Ten cores and twelve threads	1.8G	5.2G	15	55
12th generation I3	Core	1220P	Ten cores and twelve threads	1.5G	4.4G	28	64
12th generation i5	Core	1240P	Twelve cores and sixteen threads	1.7G	4.4G	28	64
		1250P	Twelve cores and sixteen threads	1.7G	4.4G	28	64
12th generation Intel i7	Core	1280 P	Fourteen cores and twenty threads	1.8G	4.8G	28	64
		1260 P	Twelve cores and sixteen threads	2.1G	4.7 G	28	64
		1270 P	Twelve cores and sixteen threads	2.2G	4.8G	28	64
13th generation i5	Core	1340P	Twelve cores and sixteen threads	1.8G	4.6G	28	64
		1350P	Twelve cores and sixteen threads	1.9G	4.7G	28	64
13th generation I7	Core	1360P	Twelve cores and sixteen threads	2.2G	5.0G	28	64
		1370P	Fourteen cores and twenty threads	1.9G	5.2G	28	64
12th generation i5	Core	12450H	Eight cores and twelve threads	2.0G	4.4G	45	95
		12500H	Twelve cores and sixteen threads	2.5G	4.5G	45	95
		12600H	Twelve cores and sixteen threads	2.7G	4.5G	45	95
12th generation Intel i7	Core	12650H	Ten cores and sixteen threads	2.3G	4.7G	45	115
		12700H	Fourteen cores and twenty threads	2.7G	4.7 G	45	115
		12800H	Fourteen cores and twenty threads	2.4G	4.8G	45	115
12th generation I9	Core	12900H	Fourteen cores and twenty threads	2.5G	5.0G	45	115
13th generation i5	Core	13420H	Eight cores and twelve threads	2.1G	4.60G	45	95

		13500H	Twelve cores and sixteen threads	2.6G	4.70G	45	95
		13600H	Twelve cores and sixteen threads	2.8G	4.80G	45	95
13th generation I7	Core	13620H	Ten cores and sixteen threads	2.4G	4.90G	45	115
		13700H	Fourteen cores and twenty threads	2.4G	5.00G	45	115
		13800H	Fourteen cores and twenty threads	2.5G	5.20G	45	115
13th generation i9	Core	13900H	Fourteen cores and twenty threads	2.6G	5.40G	45	115

Illustrate

Except for the accessories listed with the product, the contents of this manual do not represent the company's commitment. The company reserves the right to change this manual without prior notice.

We are not responsible for any direct, indirect, intentional or unintentional damages and hidden dangers caused by improper installation or use.
Before ordering a product, please consult your dealer to determine if the product's performance meets your needs.

The contents of this manual are protected by copyright. All rights reserved. No reproduction in mechanical, electronic or other ways is allowed without permission.
The final right of interpretation of this manual belongs to SHENZHEN ELSKY TECHNOLOGY CO.,LTD.

The above ordering information is for reference only. For details, please consult the sales department at 0755-82260150
Motherboard driver download https://pan.baidu.com/s/1ie7qi5NutS53ipPecRSYtw
Extraction code: cbn5